Wooden sliding salt and pepper box plan

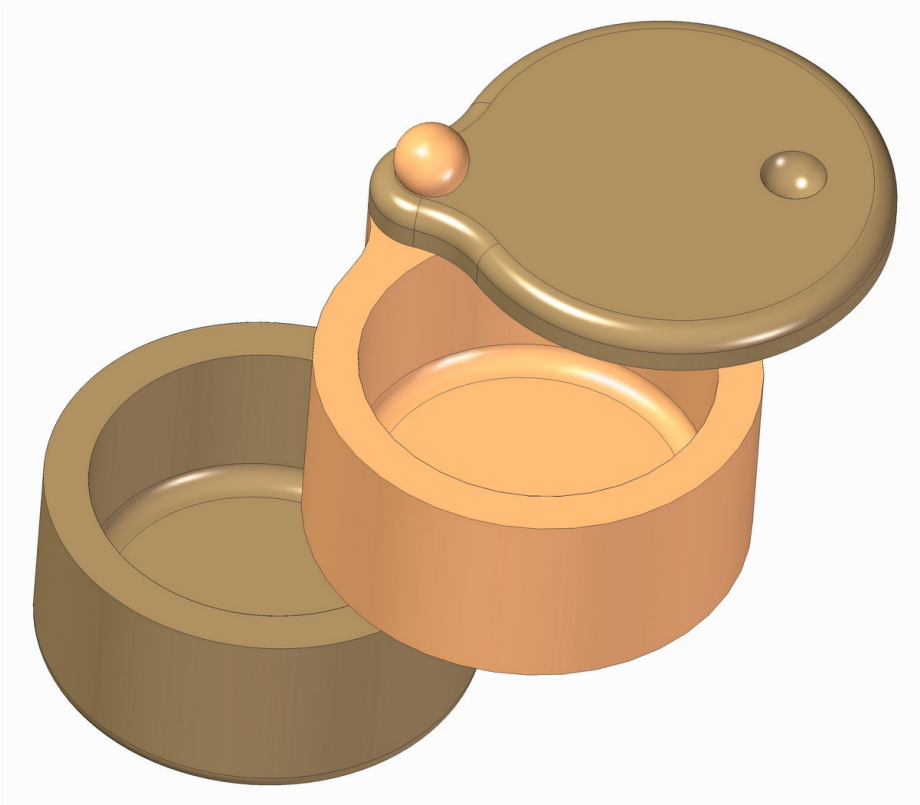

This beautiful wooden salt and pepper box is one of the simplest and yet original kitchen utensils.

You will be amazed how easy is to make this wooden spice box, and how easy is to use it. Its wide openings allow you to grab the salt and pepper with big spoon, or hand, by simply sliding the lid and top box. Of course, you can make these boxes for different kinds of spices, or by changing its dimensions, you can easily adjust this sliding box for a different purpose.

It will last a lifetime, but be careful to wash it with warm water by hands.

The measurements are given in millimeters, while the measurements given in inches are in brackets (1 inch = 25, 4 mm).

Wooden sliding salt and pepper box plan – Parts list

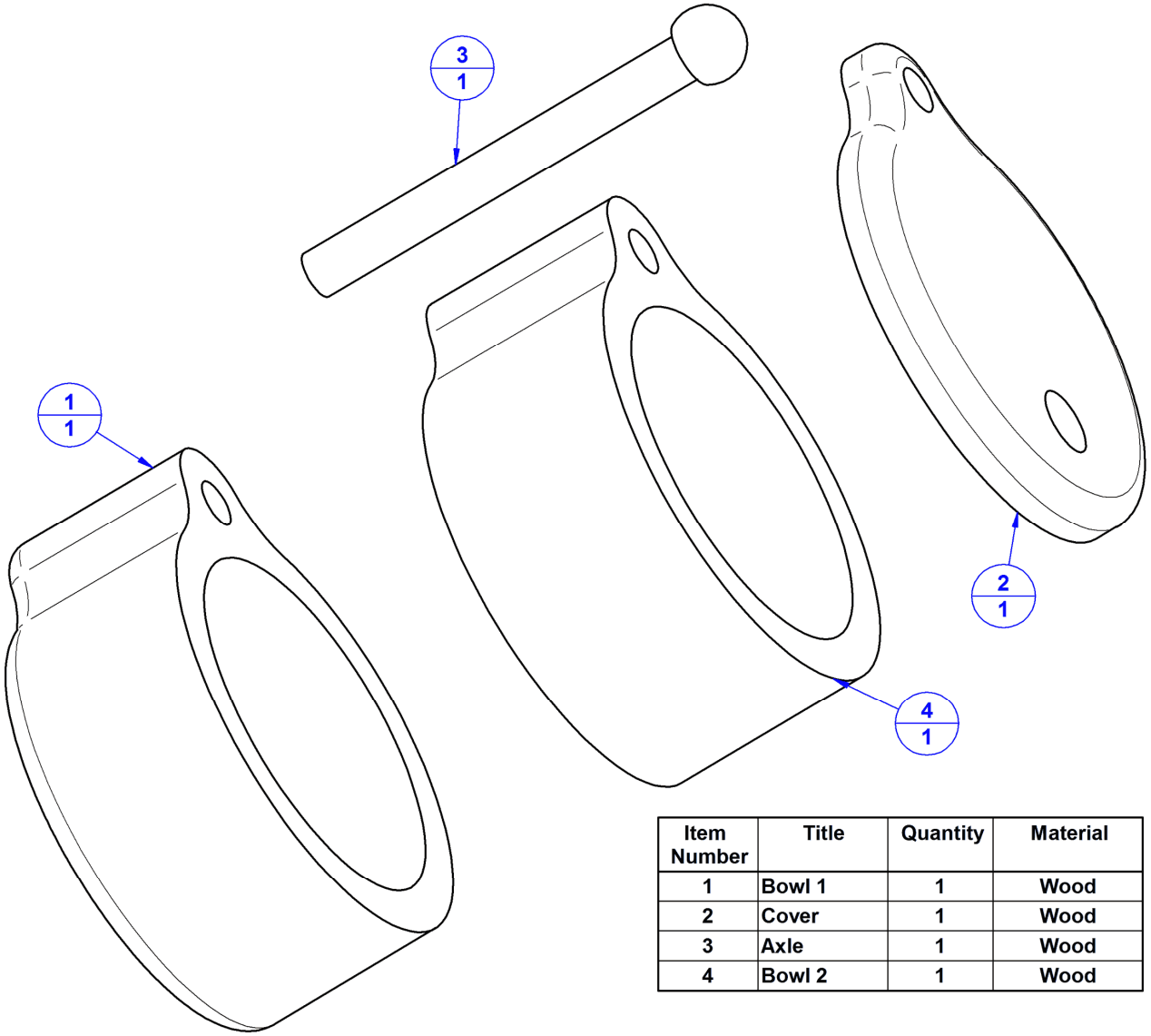

Item Number	Title	Quantity	Material
1	Bowl 1	1	Wood
2	Cover	1	Wood
3	Axle	1	Wood
4	Bowl 2	1	Wood

Wooden sliding salt and pepper box plan – Assembly drawing

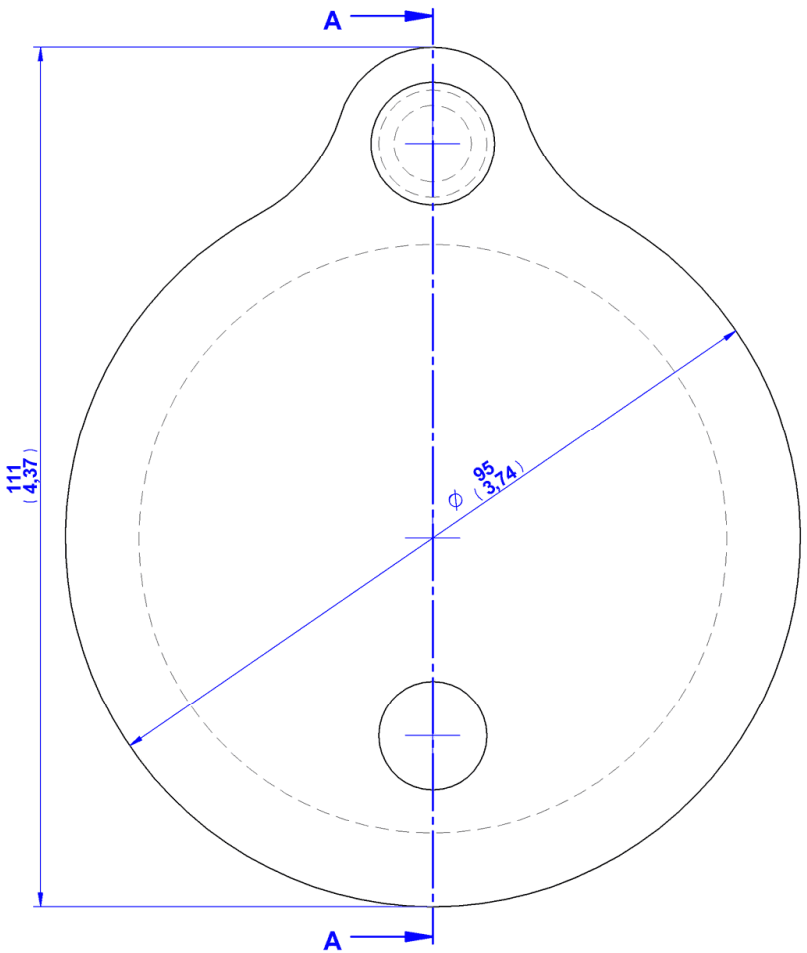

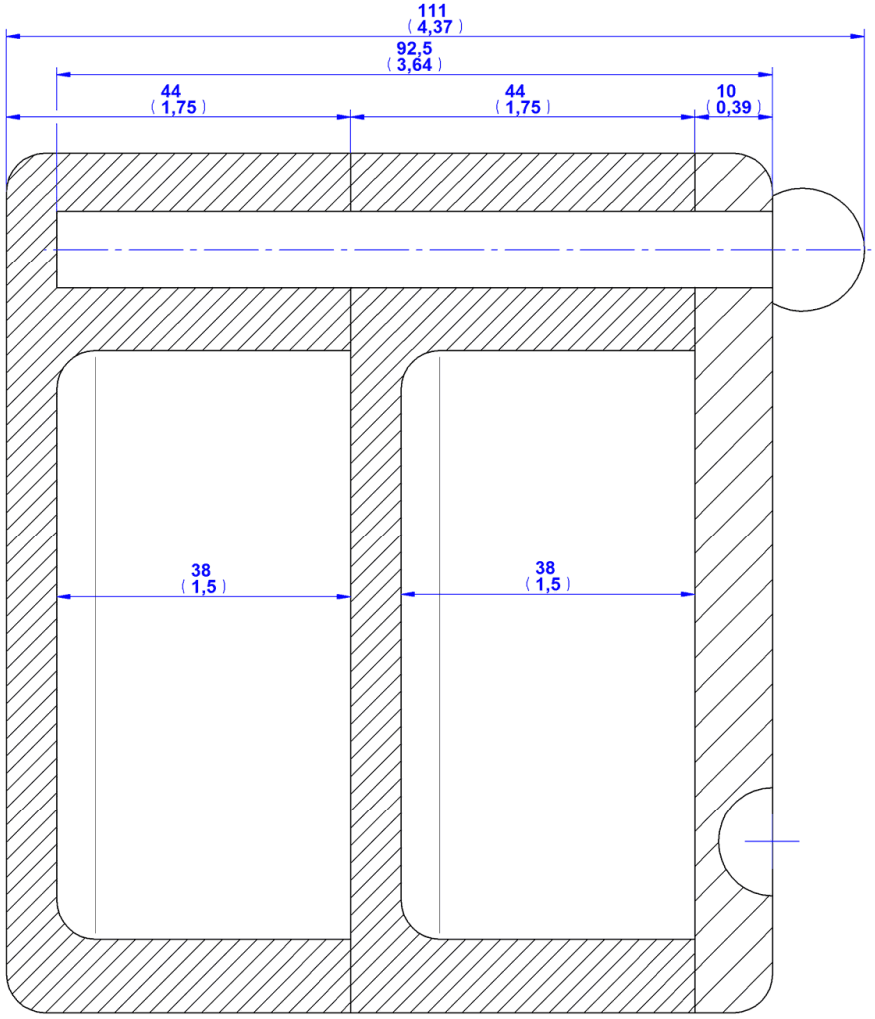

SECTION A-A

1. Bowl

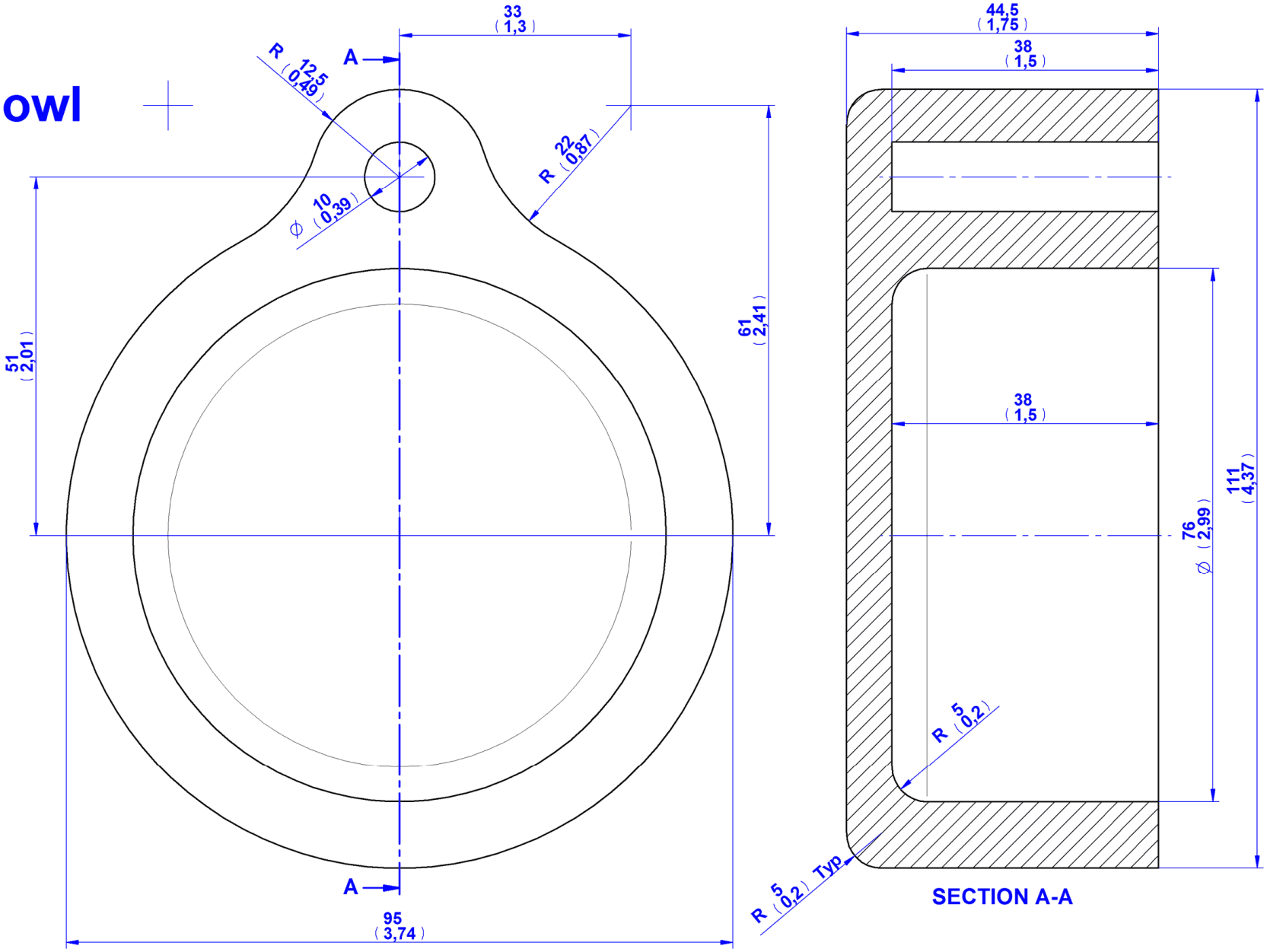
33
(1,3)
R 12,5
(0,49)
A
R 22
(0,87)
Ø 10
(0,39)
51
(2,01)
61
(2,41)
A
95
(3,74)
44,5
(1,75)
38
(1,5)
38
(1,5)
111
(4,37)
Ø 76
(2,99)
R 5
(0,2)
R 5
(0,2) Typ
SECTION A-A

2. Cover

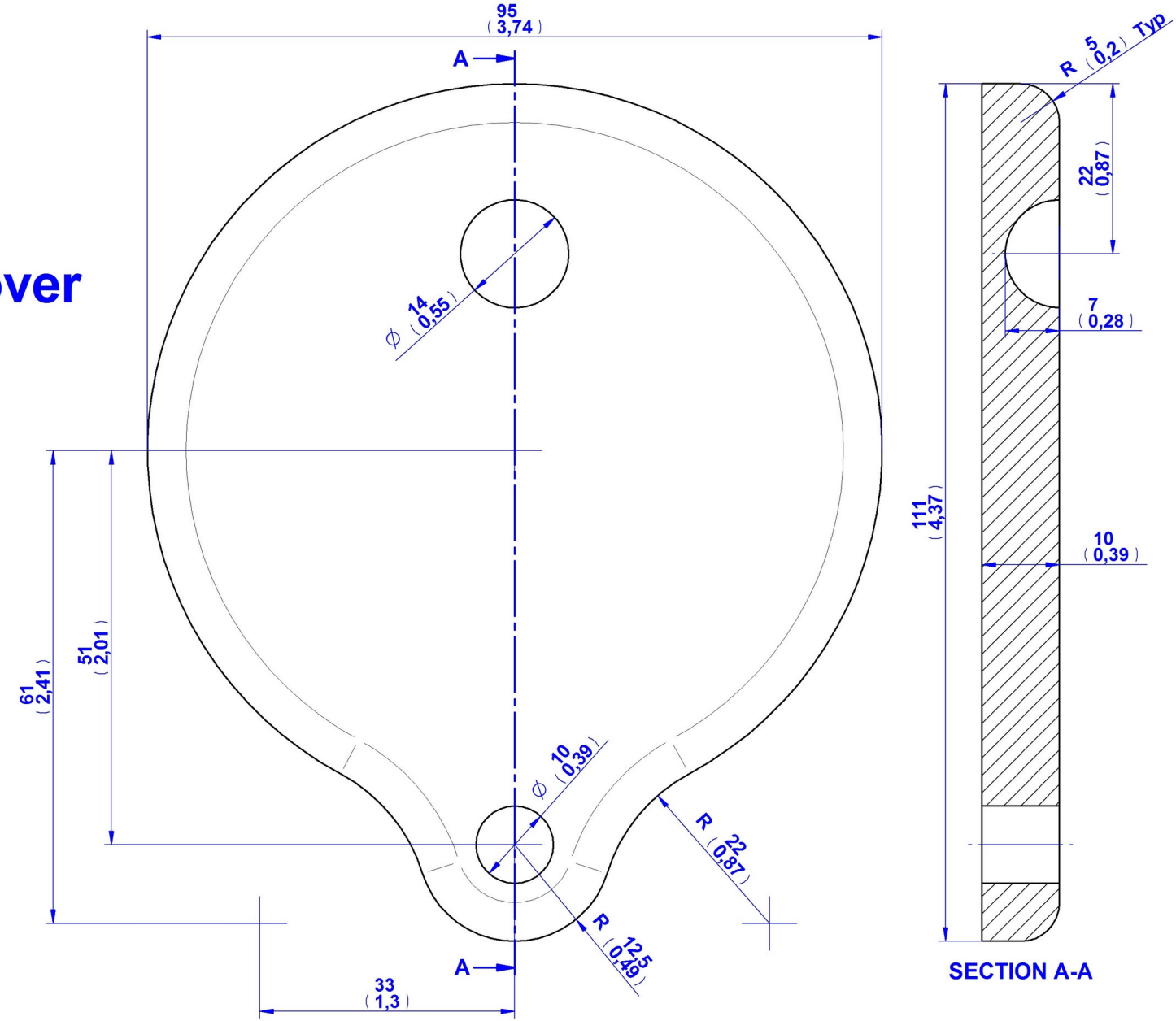
95
(3,74)
A
A
Ø 14
(0,55)
61
(2,41)
51
(2,01)
Ø 10
(0,39)
R 22
(0,87)
R 12,5
(0,49)
33
(1,3)
R 5
(0,2) Typ
22
(0,87)
7
(0,28)
111
(4,37)
10
(0,39)
SECTION A-A

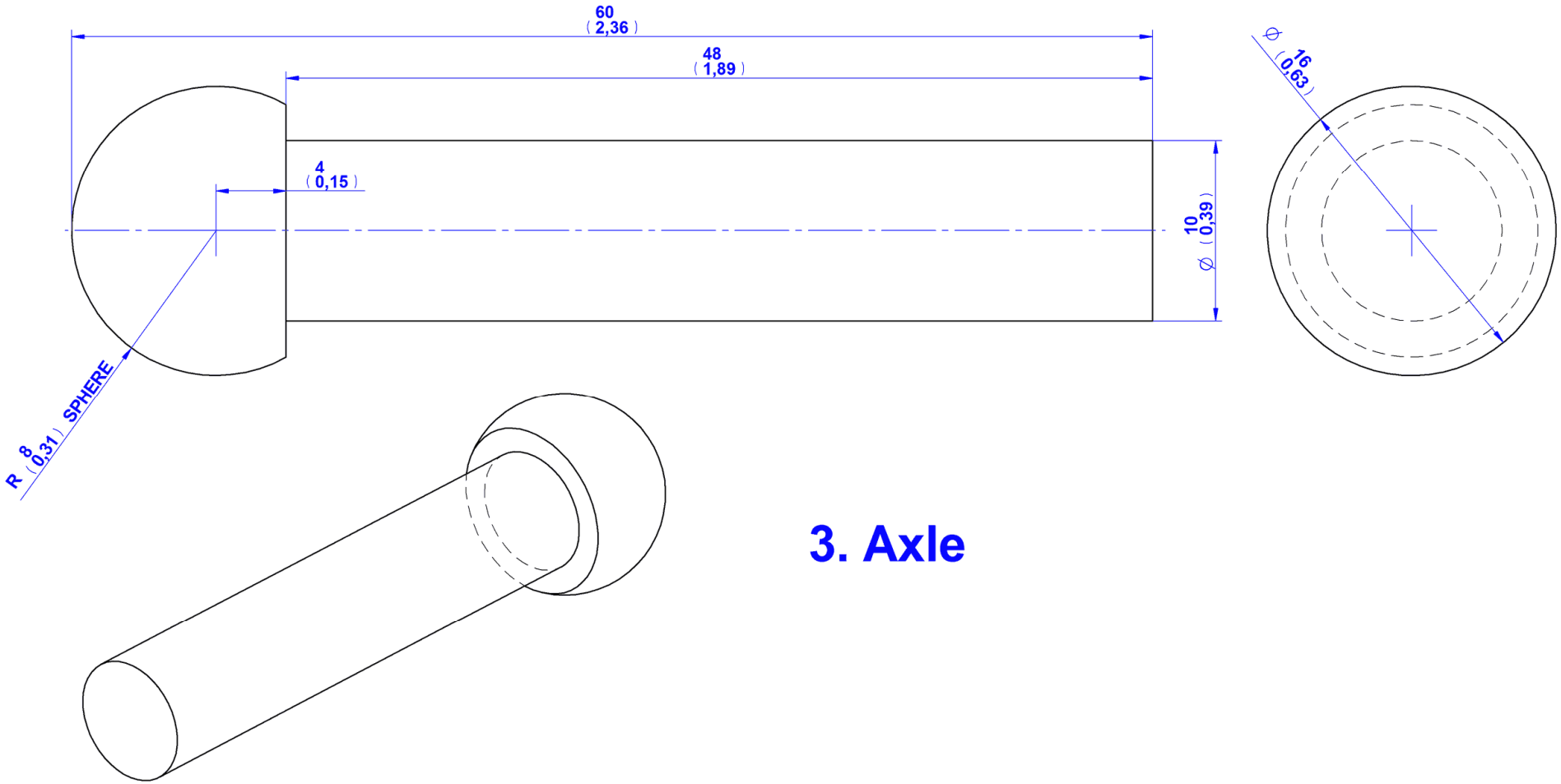

3. Axle

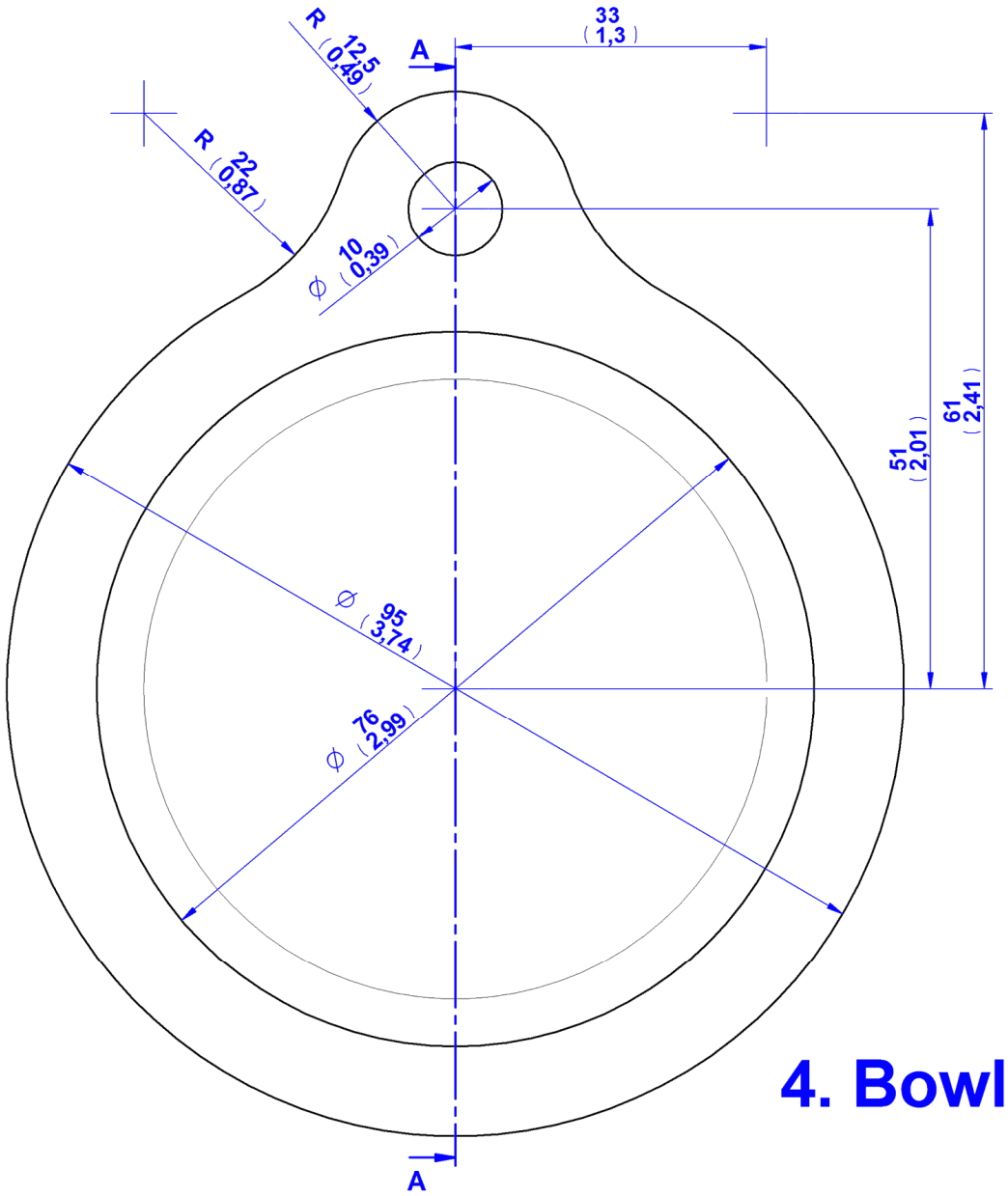

4. Bowl 2

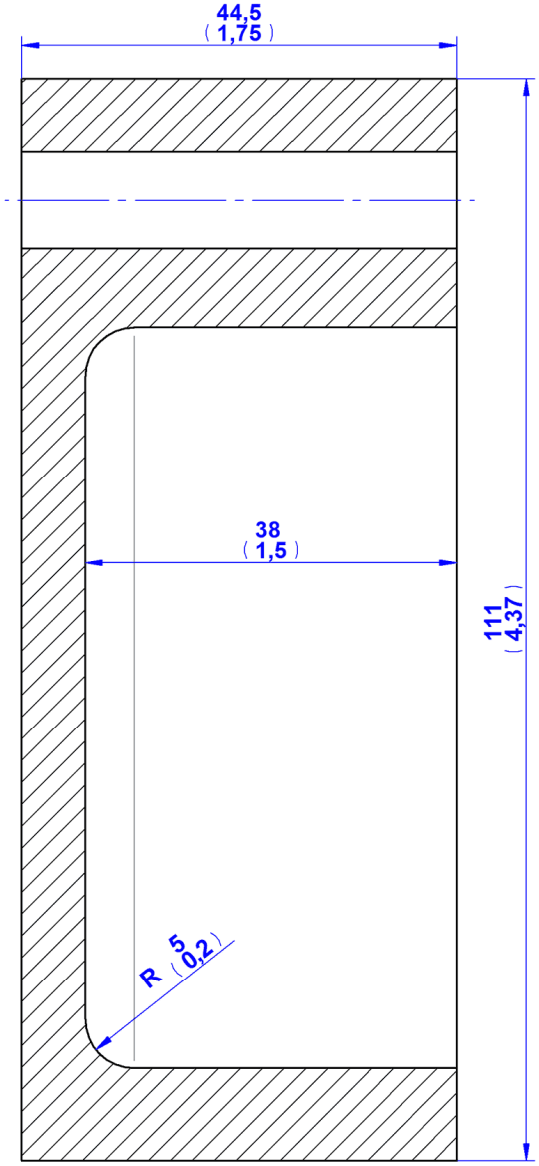

SECTION A-A

Assemblage instructions
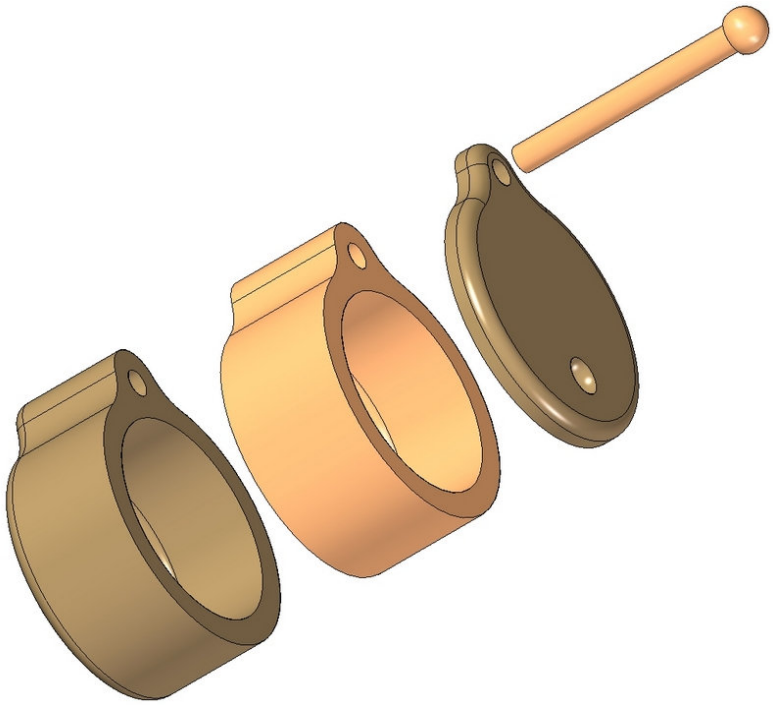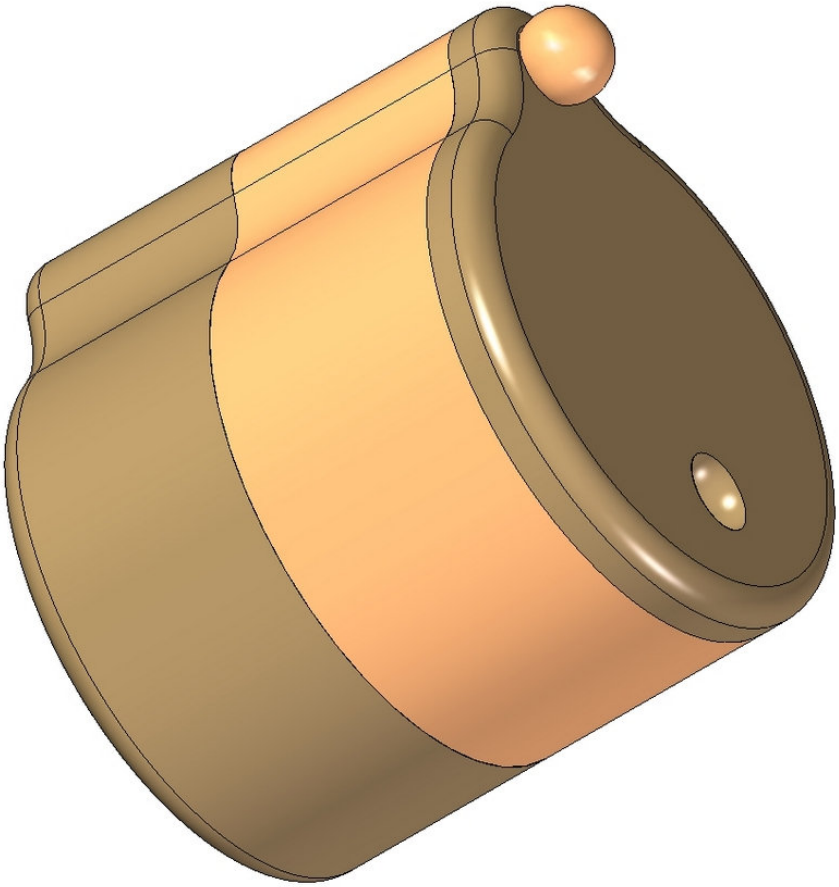
Join the Bowl 1 (part 1), Cover (part 2), Axle (part 3) and the Bowl 2 (part 4) using glue.